MARTEC®

LINK AC SERIES

Ceiling Fan Instruction Book

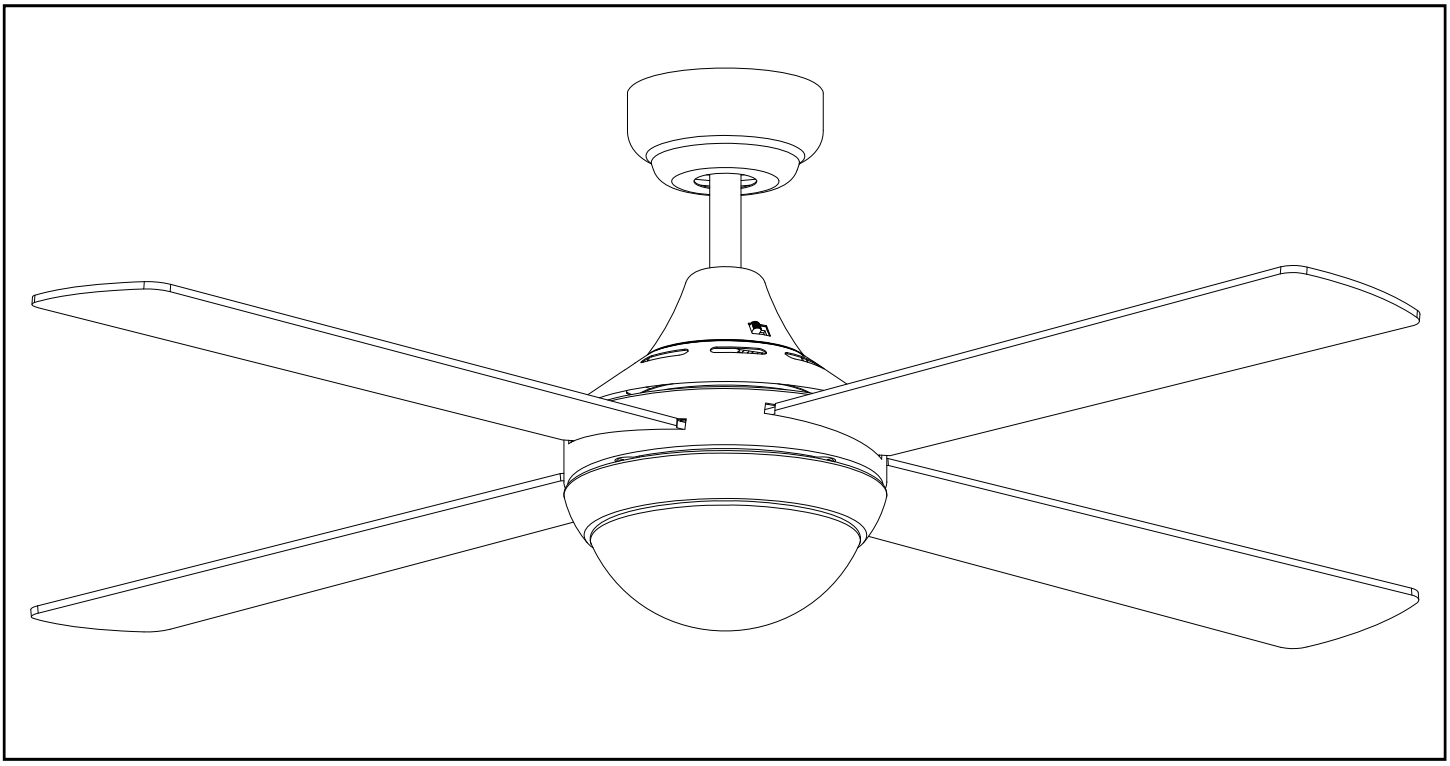

Models: FSL124 FSL1244 FSL1243

DESCRIPTION	QUANTITY
Motor assembly	1
Instruction manual	1
Screw kit	1
Balancing kit	1
Hanging bracket	1
Wall control kit	1
Blades	4

Thank you for purchasing your MARTEC **Link** Series product. Please read all instructions carefully before assembly and use.

IMPORTANT SAFEGUARDS

READ THESE INSTRUCTIONS CAREFULLY BEFORE INSTALLING OR USING THE PRODUCT. KEEP THE INSTRUCTIONS HANDY FOR FUTURE REFERENCE.

IMPORTANT: Always operate the product from a power source of the same Voltage, Frequency and rating as on the product Identication Plate.

IMPORTANT: The fan is to be installed so that the blades are more than 2.1 metres above the floor.

Avoid contacting moving parts, keep hands, hair and clothing well away from the product while it is in operation.

A Luminaire (light fitting) included in the fan packaging may only be fitted to this fan.

"This appliance is not intended for use by persons (including children) with reduced physical, sensory or mental capabilities, or lack of experience or knowledge, unless they have been given supervision or instruction concerning use of the appliance by a person responsible for their safety."

"Children should be supervised to ensure that they do not play with the appliance."

Do not operate any product which has been or appears damaged in any matter or after the product malfunctions.

CAUTION: To reduce the risk of electric shock, do not install the product where it can be exposed to rain, moisture or any liquid.

Do not use the product for other than its intended use as described in these instructions. This product is intended for normal domestic household use only. The use of accessory attachments other than those recommended by the manufacturer may cause safety hazards.

SAFETY

Installation of fans must follow S.A.A. standards and meet local Authority regulations. A fully qualified and licensed electrician lawfully MUST carry out installation. Means for disconnection must be incorporated in the fixed wiring in accordance with wiring rules.

Fan and light MUST be earthed. Bracket MUST be firmly attached to a solid structure i.e. concrete ceiling, steel structure or timber frame, etc. and MUST be nailed between beams if the timber option is required. ONLY install the wall controller kit that comes supplied by Martec Pty Ltd within package. DO NOT control operation of fan and light with any other wall control than what was approved by Martec Pty Ltd and supplied within this package, as this will void warranty.

WARNING

Only approved Martec Pty Ltd wall controllers should be used for the operation of our fans. The use of unauthorised controllers will void the warranty. DO NOT mix blades from one fan to another. All blades must be replaced if damaged.

With Light model

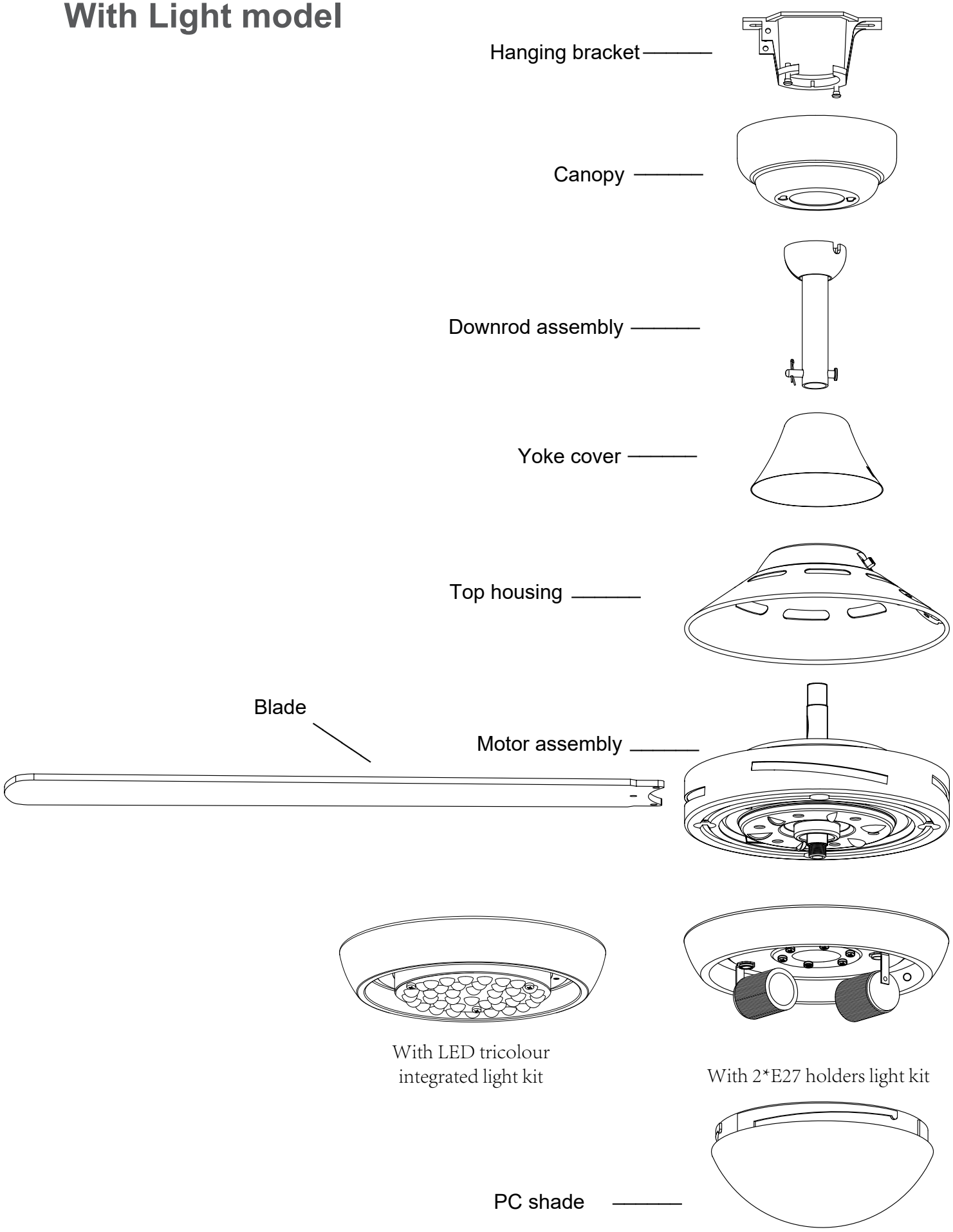

Without Light model

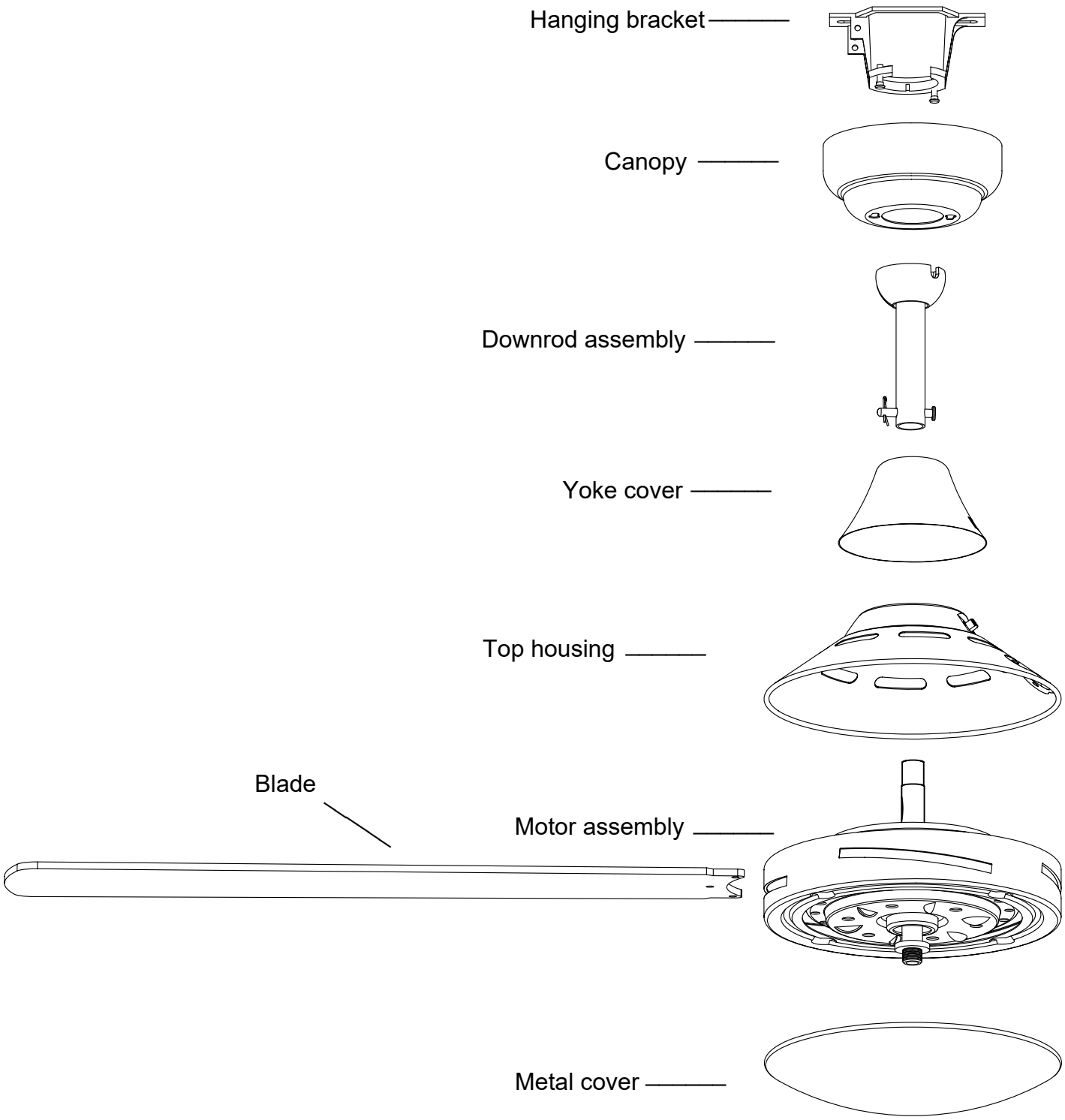

HOW TO ASSEMBLE

Secure the hanger bracket to ceiling beam or a suitable piece of timber inser ed between the ceiling beams. Martec Pty Ltd recommends the bracket to be a ached with two long screws as supplied within the package. There is a ball seat rubber cover need to be pressed into the bracket.(See Fig.1.)
Place circular shockproof gasket above the hanger bracket. Align the bracket and screw the hanger bracket to the ceiling tig tly.(See Fig.2.)

Place fan into hanger bracket and align Ball Joint Slot with hanger bracket as illustrated.(See Fig.3.)

A er wiring is completed, a ach the canopy to the hanger bracket by pushing upwards and twisting a ti clockwise. Locate screws in keyholes and tig ten., ensuring canopy is not touching the ball joint. (See Fig.4)

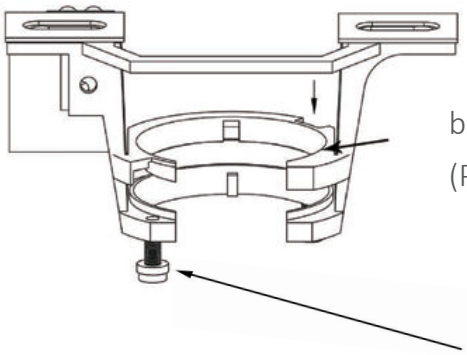

Fig.1

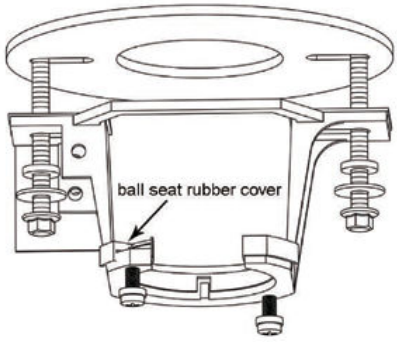

Fig.2

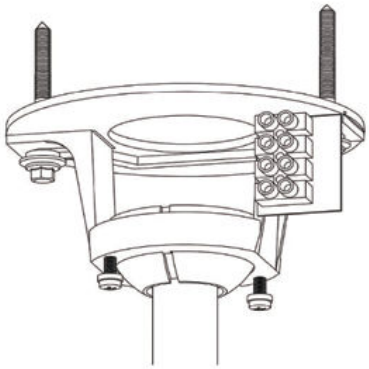

Fig.3

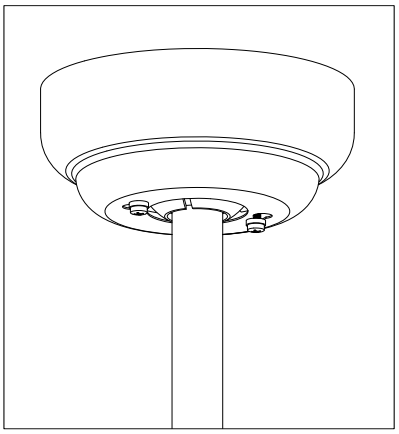

Fig.4

HOW TO INSTALL BLADES

Remove the two screws from the covering plate of blade-fixing hole (see fig.4)
Insert blades one at a time through four slots around the canopy and secure with three screws for each blade through the top opening. Repeat this procedure for all blades (see fig.4**a)**
Replace the cover plate and secure with two screws one all four blades have been firmly fitted.
Please ensure that the blades do not get bent during the installation process while the fan may be on the ground, as this will affect the performance and balance of the fan and this is NOT covered under warranty.

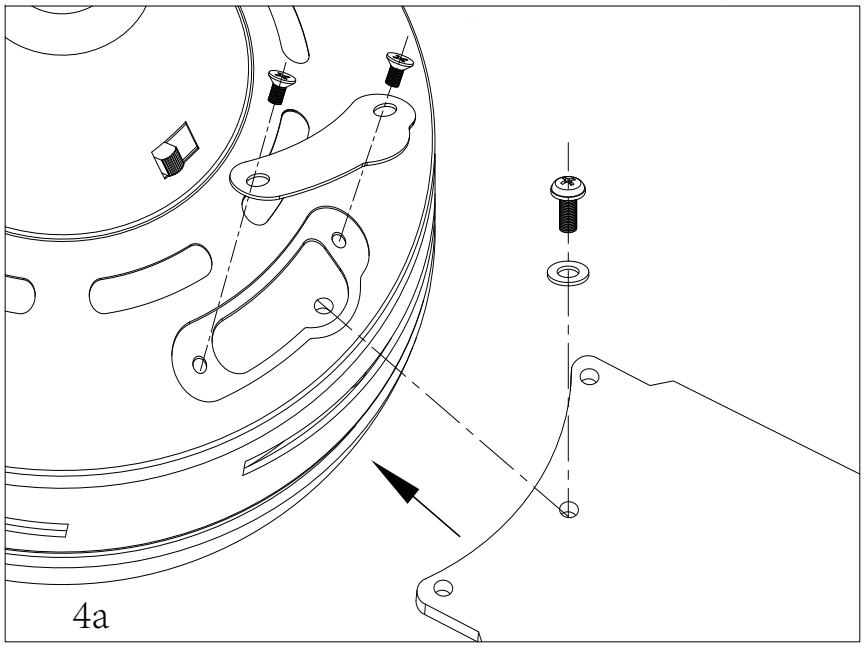

4a

USE IN ALL SEASONS

Always ensure that fan is set to "OFF" and blades are still prior to changing direction of blades.
Reverse switch on fan should ideally be set on "FORWARD" (left position) during warmer seasons to move blades in an anticlockwise direction & "REVERSE" (right position) during our cooler seasons to make the fan rotate in a clockwise direction (see fig.5)

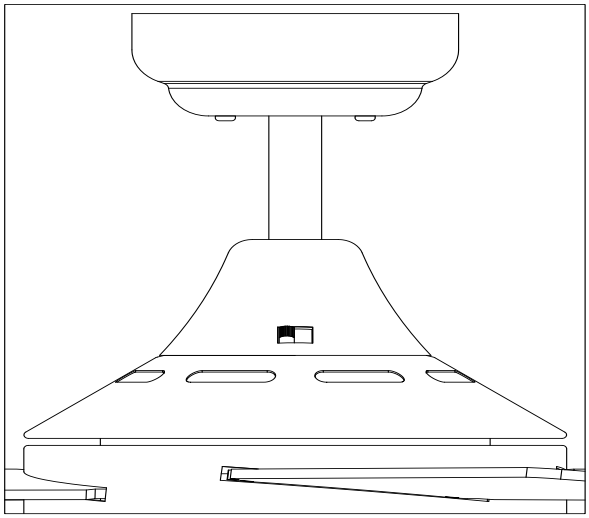

HOW TO INSTALL/REMOVE THE PC SHADE (Version with lights)

Align the shade as shown in the figure below, and place the PC (Plastic) shade.
Spin it clockwise.

To remove turn the shade anti-clockwise

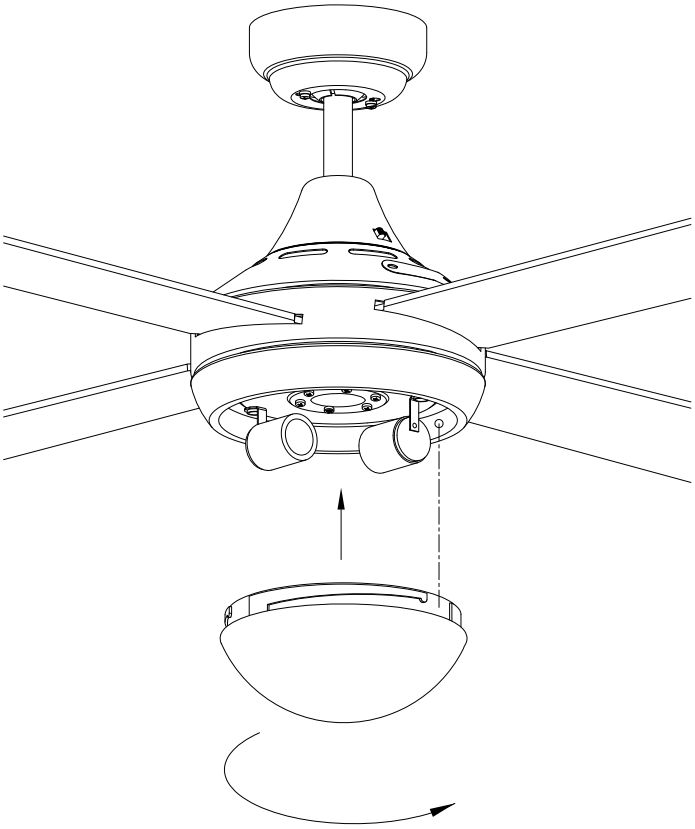

If the fan is with E27 light model (FSL1244)

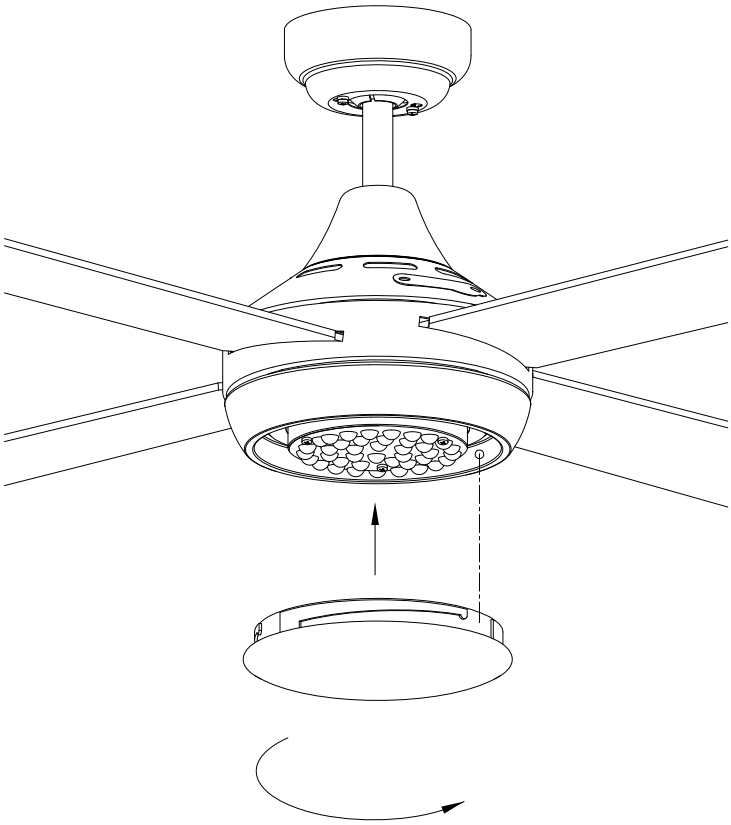

If the fan is with LED tricolour light model (FSL1243)

HOW TO INSTALL/REMOVE THE METAL COVER (Version without lights)

Align the metal cover with the central spindle extended from motor as shown in the figure below, and spin it clockwise.

To remove turn the shade anti-clockwise

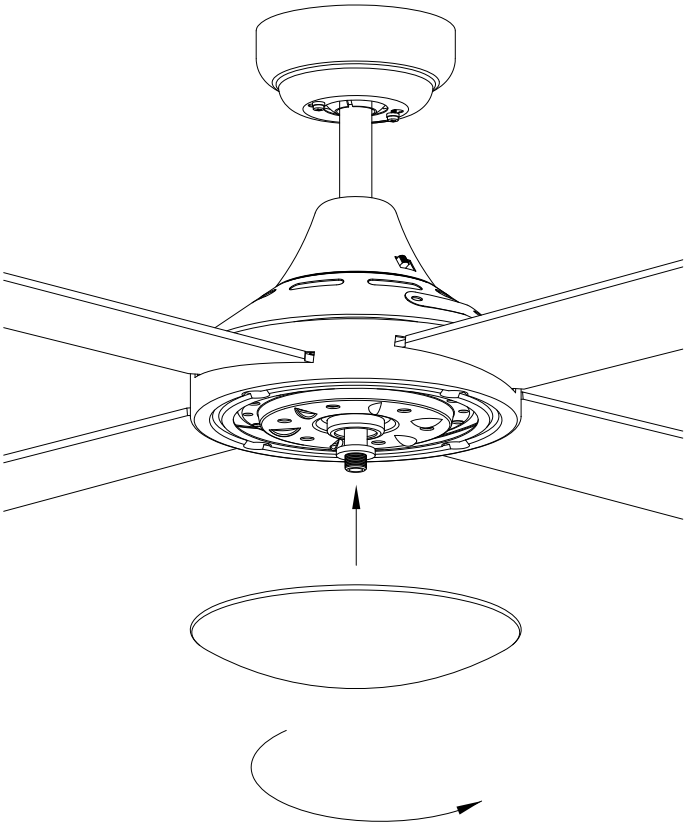

If the fan is without light model (FSL124)

Tricolour CCT (Colour changeable temperature)

Please make sure the light switch is off before changing the colour temperature. Simply flick the switch on the LED plate (See Fig.6.) to select the desired colour temperature (3000K, 4000K or 5000K).



Fig.6

Dimming for Tricolour Models)

The Four Seasons Link fan has a smart 3 step dimming LED light module which doesn't require a dimmable remote control or a wall dimmer. It only requires a normal on/off remote kit (MPREM) or a normal light wall switch (supplied as part of the wall controller in the box).
Turn the switch on and the light will turn on. Flick the switch on/off within 1 second and the light output will dim down to approx. 50%, flick the witch on/off a ain and the light output will dim down to approximately 15%. The light kit has no memory func on, it will turn on at 100% initially.

Wire Connections remote control

With/Without Light

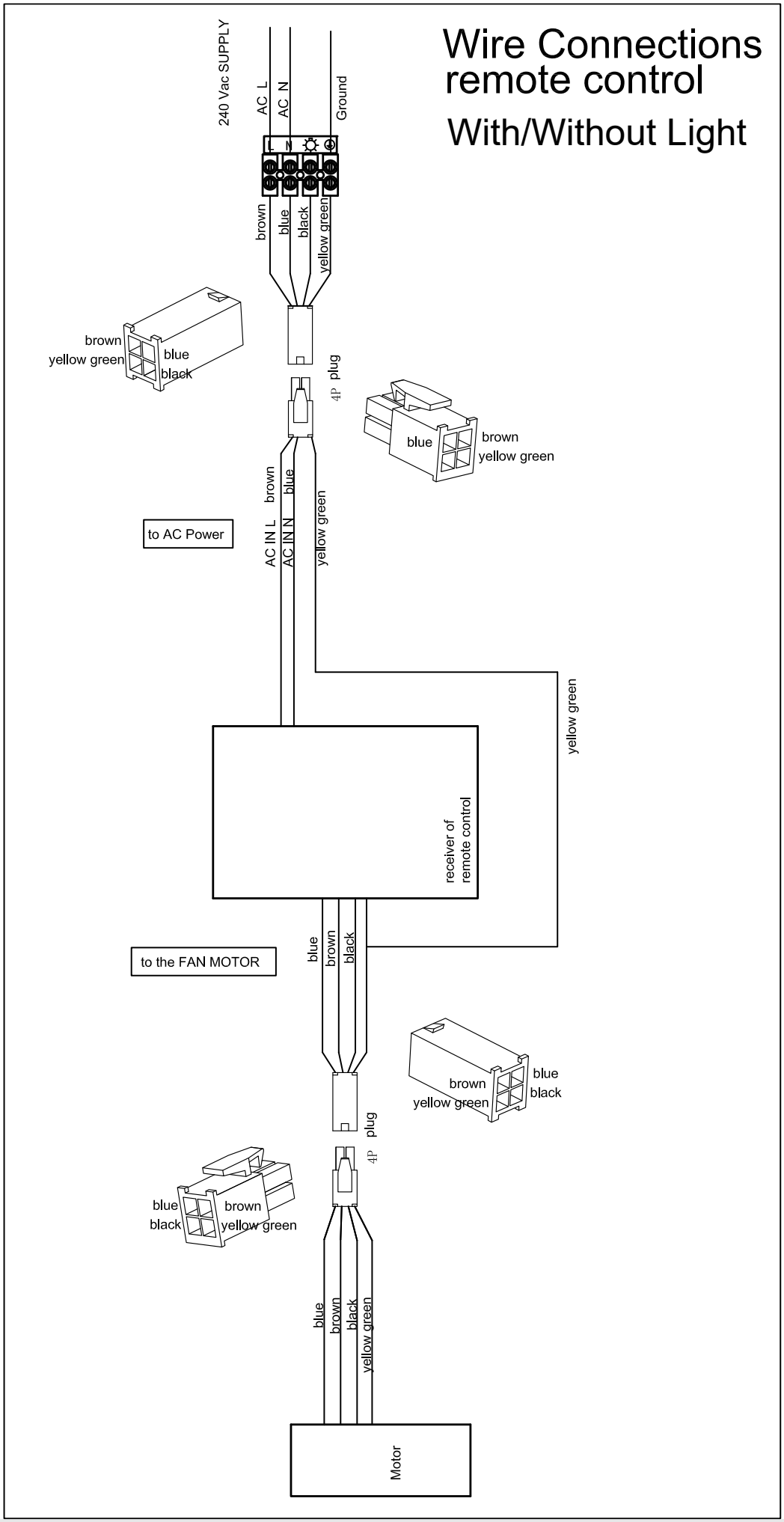

Wire Connections wall control With Light

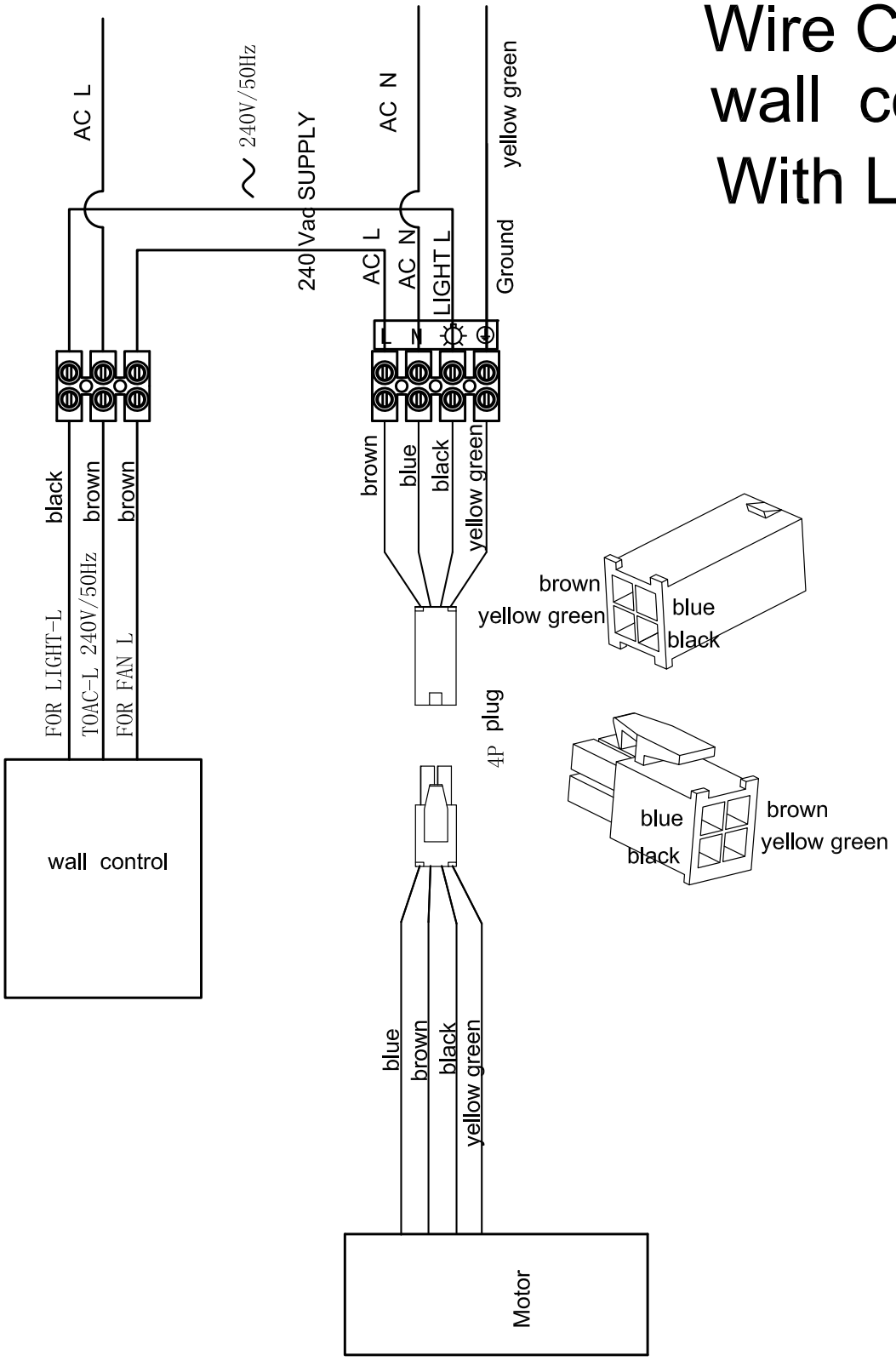

Wire Connections
wall control
Without Light

