POLO DC Series Installation Guide

Thanks for choosing our Polo DC Series ceiling fan.
We strongly recommend that you read this manual carefully before installation.

6 YEAR Warranty

Models Parameters (Fan Only):-

MDCP133WWN 1320mm 3 Blade DC WiFi Ceiling Fan Matt White / Walnut
MDCP133W 1320mm 3 Blade DC WiFi Ceiling Fan Matt White
MDCP133ND 1320mm 3 Blade DC WiFi Ceiling Fan Sand Nickel /Gray Wood Grain
MDCP1333WWN 1320mm 3 Blade DC WiFi Ceiling Fan Matt White / Walnut with light
MDCP1333W 1320mm 3 Blade DC WiFi Ceiling Fan Matt White with light
MDCP1333ND 1320mm 3 Blade DC WiFi Ceiling Fan Sand Nickel /Gray Wood Grain with light

Part List:

Qty 1x Motor assembly
Qty 1x Instruction manual
Qty 1x Screw kit
Qty 1x Mounting Bracket
Qty 1x Remote & Receiver
Qty 3x Blades

Application

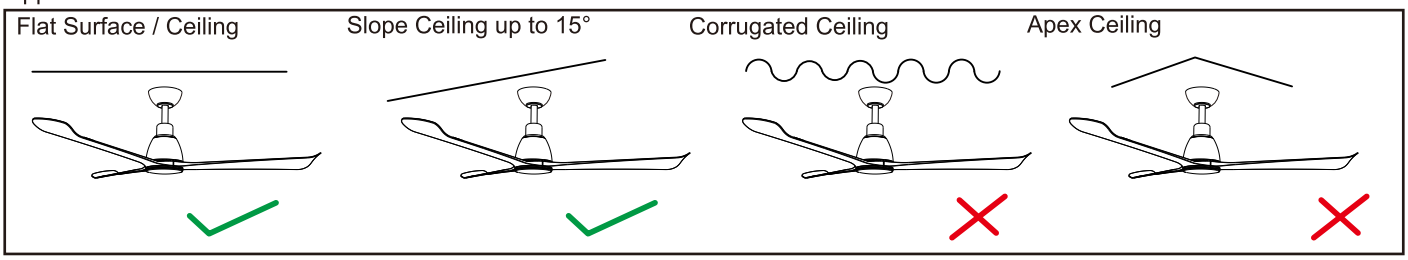

How to Assemble

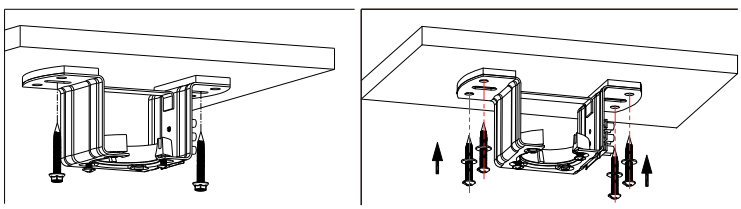

Secure the hanger bracket to ceiling beam or a suitable piece of timber inserted between the ceiling beams using the two long screws, or the four shorter screws supplied with the package.

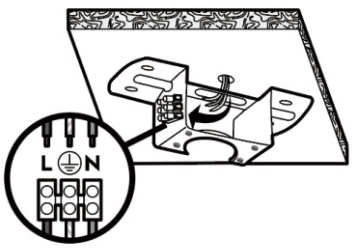

Connect to mains as illustrated

E: sales@martecltd.com.au | P: 02 8778 7500
www.martecaustralia.com.au

MARTEC Cooling

Place fan into hanger bracket and align Ball Joint Slot with hanger bracket as illustrated.

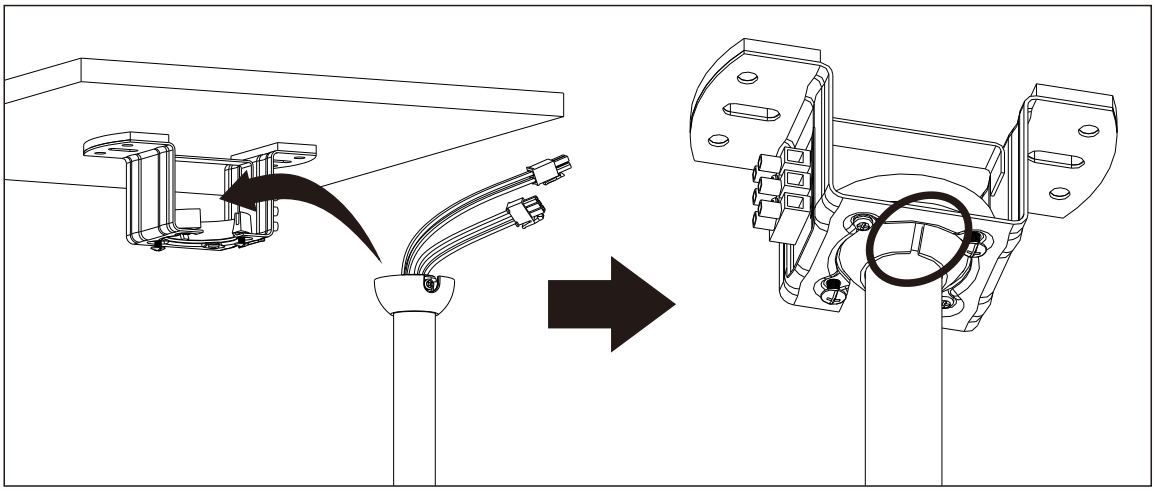

Place the receiver into the bracket and connect between power and motor as illustrated.

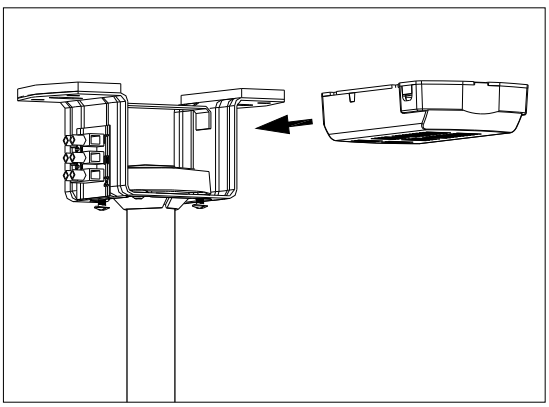

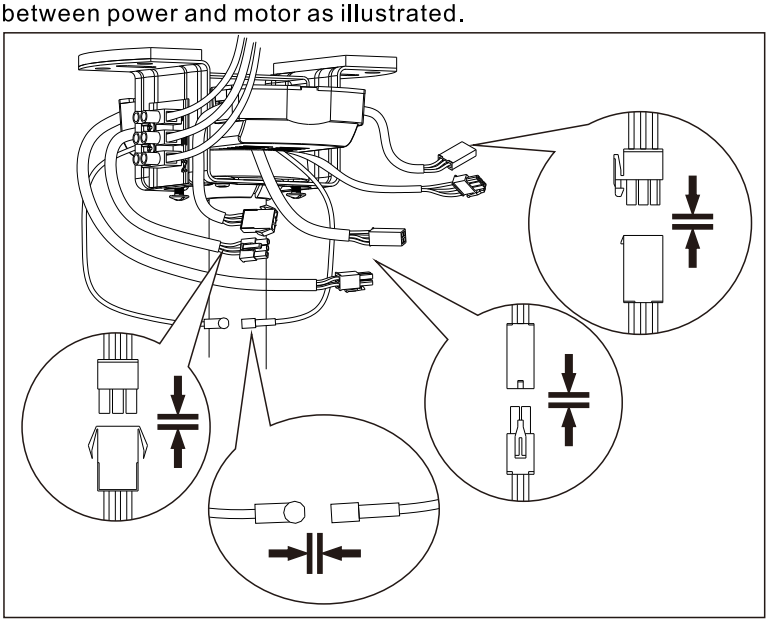

Wire up the receiver with quick connectors and insert into the mounting bracket. Please make sure the antenna wire has been safely folded inside the canopy cover before final assembly (DO NOT cut the antenna wire)

Important Reminders

Receiver must be correctly installed in the mounting bracket
When the transmitter cannot control the receiver, please check

i) has sufficient battery in the transmitter
ii) any existence of similar remote controlled products nearby that cause interference
Replace battery if getting low as this will affect sensitivity of the transmitter
Take the battery out from the transmitter when leaving used for a long time to avoid battery leaks
Isolation switch MUST be connected in the line

Carefully pull up and install the ceiling canopy as illustrated

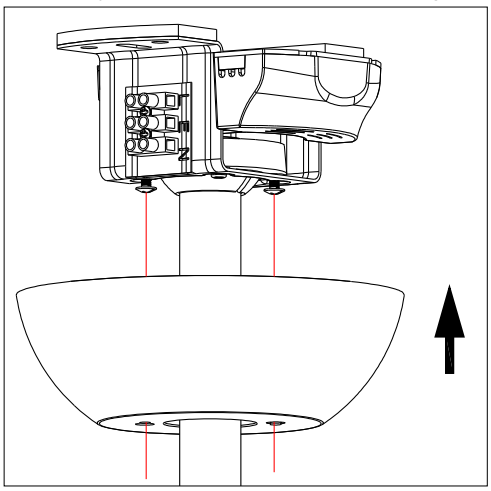

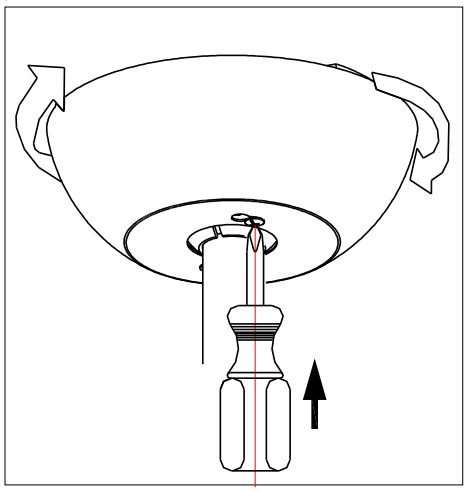

Carefully put the screw cap on using the piece of magnetic supplied.

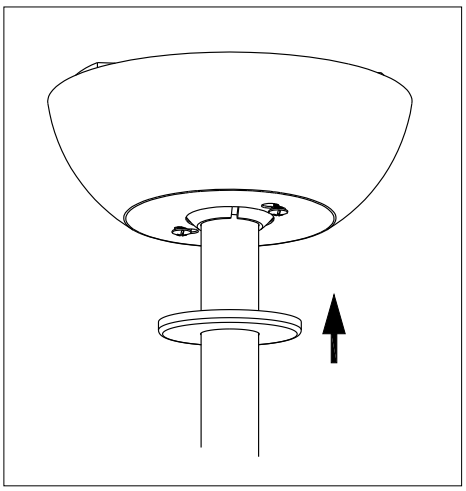

How to install blades

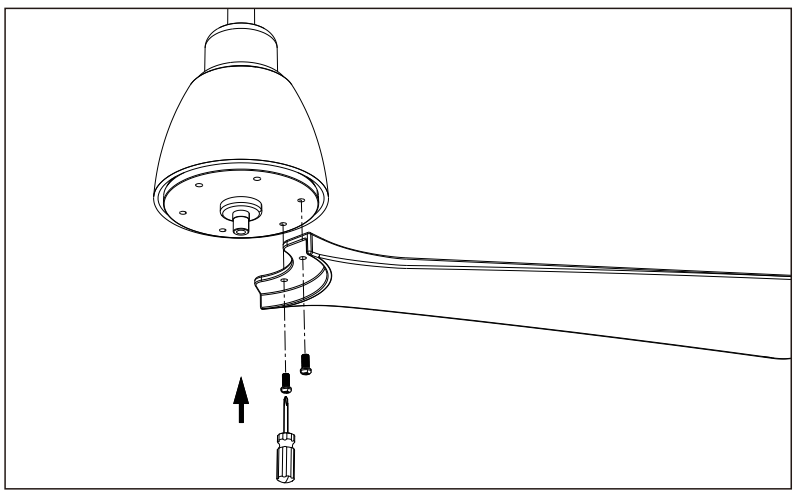

Install the blades to the bottom of the motor. Tighten and secure blade with screw and washer provided. Repeat this procedure until all blades are installed.

NB:Ensure the blades do not get damaged or bent during the installation process while the fan maybe on the ground, this will affect the performance and balance of the fan and this is NOT covered under warranty

Install the cover as illustrated to finish the installation.

If you are installing model with LED light, **GO TO** the next step.

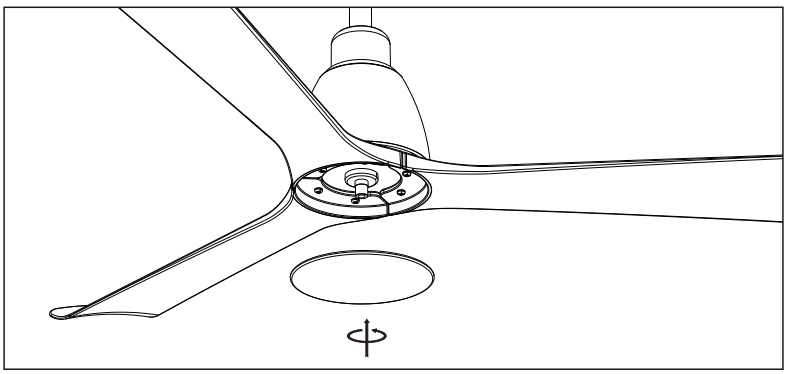

Installing light

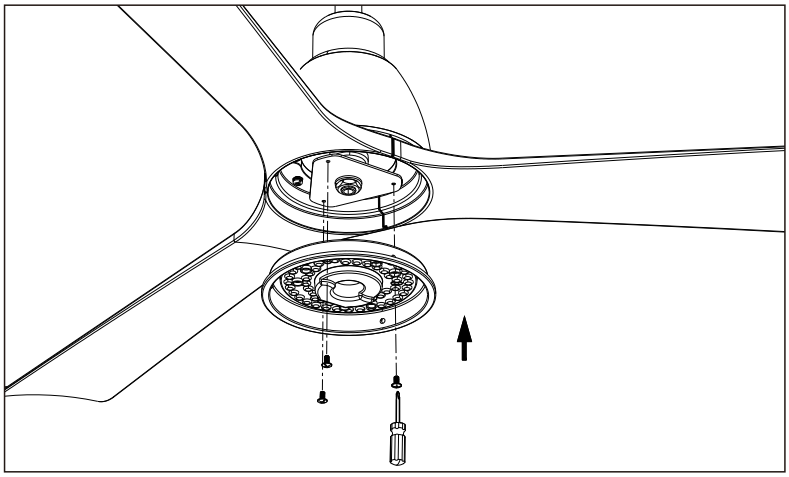

Install the LED light plate onto the steel bracket as illustrated with the 3 supplied screws.

Connect LED with power by the quick connectors.

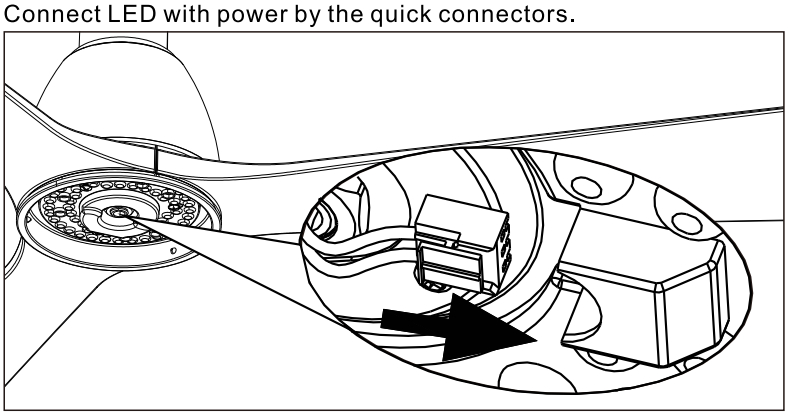

Install the diffusers as illustrated to finish the installation.

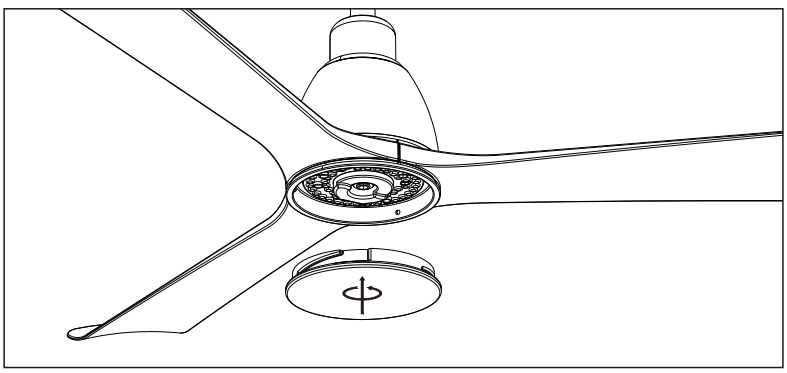

WARNING Installation MUST carry out by a qualified and licensed electrician.

WiFi / Remote Control Pairing

Fan only model

Pairing the remote control
1. Turn on the ceiling fan.
2. Within the first 20 seconds, continue pressing the button until you hear a "beep" sound. ie. It is paired.

If you don't hear a "beep" sound, repeat step 1 and step 2 again.

Entering WiFi Pairing mode:
1.Turn on the power.
2.Within the first 20 seconds, press and hold the " " button until a "beep" is heard.
3.Continue step connect on your smart devices to complete the pairing.

If you don't hear a "beep" sound, repeat the above steps.

FAN OFF : to switch off the fan.

SLEEP MODE : Turn on the fan at an extra lower speed to create a general breeze.

SPEED BUTTON: 1 = lowest speed. 6 = highest speed.

NATURAL WIND MODE : designed for the elderly and children. 1-6 speed changes randomly to feel the breeze.

FORWORD AND REVERSAL : summer/winter reverse mode.

TIMER 1H/4H/8H: preset timer for fan and light to stop automatically. ie. if timer set at 1H and then press 4H, fan will stop at 4H. Setting default to last press.

WIFI BUTTON :Follow the instructions and press and hold for 20 seconds to enter wifi matching mode.

Fan LED Light Model

Pairing the remote control
1. Turn on the ceiling fan.
2. Within the first 20 seconds, continue pressing the button until you hear a "beep" sound. ie. It is paired.

If you don't hear a "beep" sound, repeat step 1 and step 2 again.

Entering WiFi Pairing mode:
1.Turn on the power.
2.Within the first 20 seconds, press and hold the " " button until a "beep" is heard.
3.Continue step connect on your smart devices to complete the pairing.

If you don't hear a "beep" sound, repeat the above steps.

FAN OFF : to switch off the fan.

SLEEP MODE : Turn on the fan at an extra lower speed to create a general breeze.

SPEED BUTTON: 1 = lowest speed. 6 = highest speed.

NATURAL WIND MODE : designed for the elderly and children. 1-6 speed changes randomly to feel the breeze.

FORWORD AND REVERSAL : summer/winter reverse mode.

TIMER 1H/4H/8H: preset timer for fan and light to stop automatically. ie. if timer set at 1H and then press 4H, fan will stop at 4H. Setting default to last press.

LIGHT ON/OFF : to switch off the light.

CCT : warm white (2700K) / netural white (4000K) / cool white (6500K)

LED- LED+ : minus "-" = reduces brightness
plus "+"= increases brightness

6* Year Warranty
(3 Year In-Home + additional 3 Year Replacement on the motor only)

For further information please visit our website (link below) OR scan the QR code.
https://www.martecaustralia.com.au/warranty-statement/

WARNING
- Installation of fans MUST follow SAA standards and meet local authority regulations.
- Installation MUST be carried out by a qualified and licensed electrician.
- Fan and light MUST be earthed.
- Bracket MUST be firmly attached to a flat solid structure or timber frame.
- DO NOT mix blades from one model to another, all blades MUST be replaced if damaged.
- The warranty is VOID if product is not installed according to this installation guide.

E: sales@martecltd.com.au | P: 02 8778 7500
www.martecaustralia.com.au

MARTEC Cooling

WARNING Installation MUST carry out by a qualified and licensed electrician.

Smart Life matching process, please follow the steps:

1.Download the “Smart Life” APP on your smart devices by scanning the QR code below with camera.

2.Turn on WiFi and Bluetooth on your smart devices. Ensure it’s connected to a 2.4GHZ WiFi.

3.Open the APP, follow the steps to register new user account or login existing account.

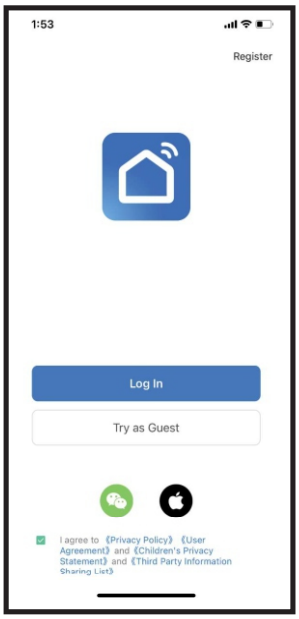

4.Follow instructions in main manual (steps can also be found on the back of the remote) to put the fan into WiFi pairing mode. If the operation is successful, go to step 6. If the fan has previously been paired or you can’t get it to work, please go to step 5 to RESET the fan.

5.RESET the fan. This step is NOT necessary if the fan has successfully entered WiFi pairing mode in the last step, if not, try to RESET the fan: turn on the fan, power off after 10 seconds, power on again after 15 seconds, long press “Fan Stop” for 5 seconds, if "beep beep" are heard, the reset is successful. If "beep beep" is not heard, the reset is failed, please repeat this step.

6.Once the fan has entered WiFi pairing mode, open the APP again on the smart device. Click “Add Device” in the middle or the “+” on the top right of the screen.

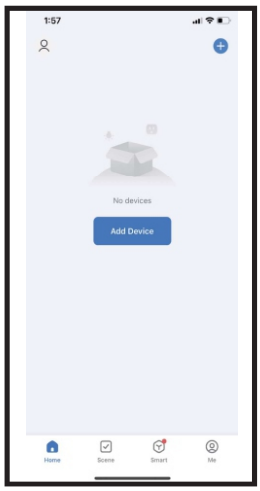

7.The auto scan should begin automatically, and the fan should show up at the top of screen within a few seconds.

Note: If the fan is not showing up, you can add it manually by clicking and navigate to: >Add Manually >Small Home Appliance > Fan

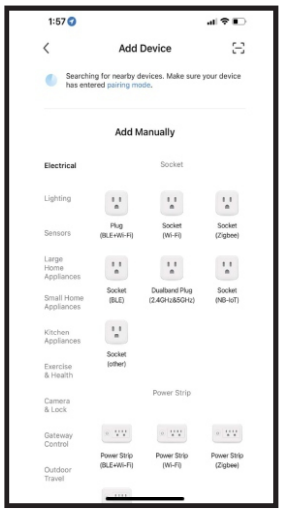

WARNING Installation MUST carry out by a qualified and licensed electrician.

8.Follow instructions in the APP to finish the set up.

E: sales@martecltd.com.au | P: 02 8778 7500
www.martecaustralia.com.au

MARTEC Cooling

WARNING Installation MUST carry out by a qualified and licensed electrician.

Wire Connections

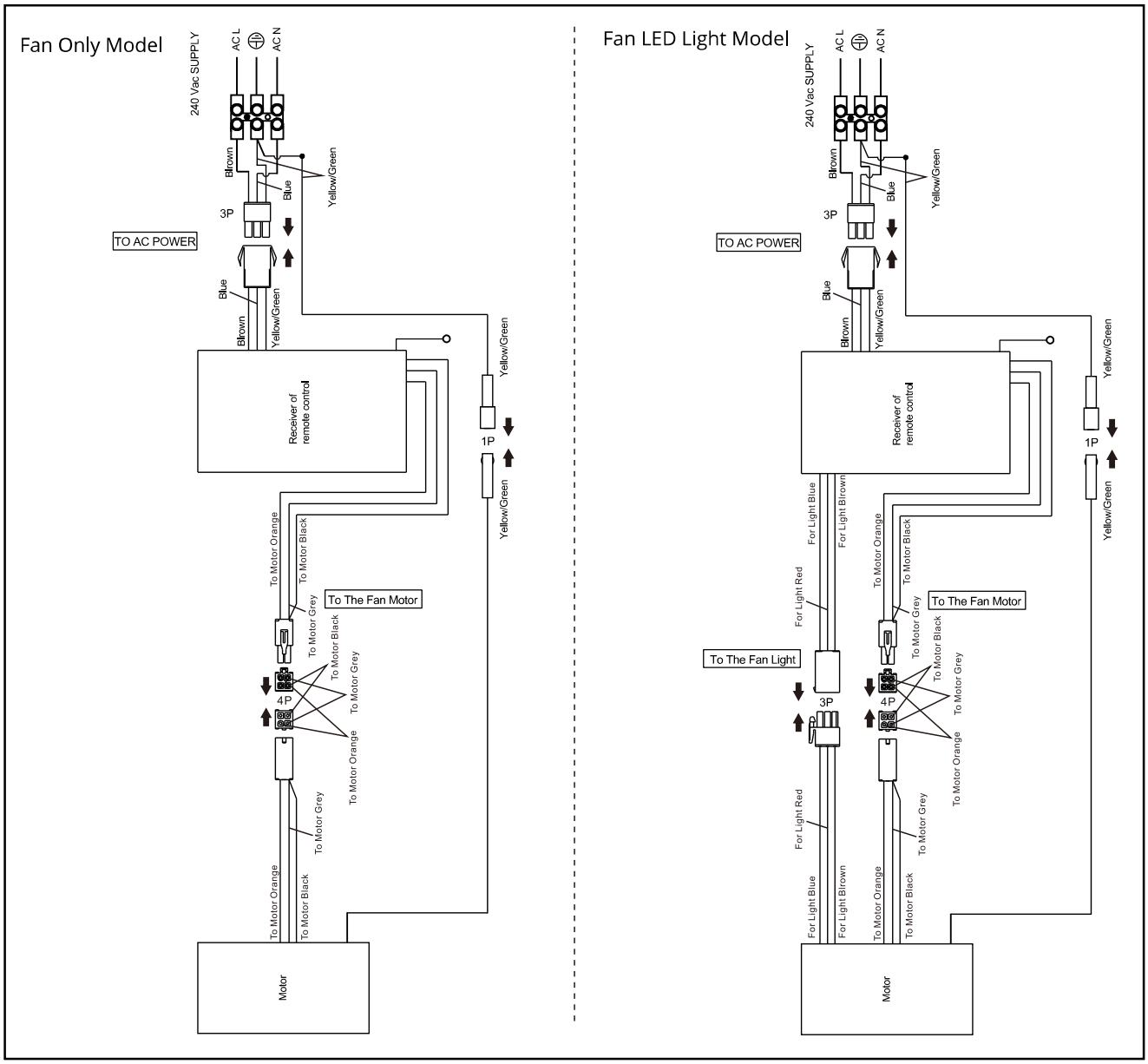

6* Year Warranty

Visit our website for details *https://www.martecaustralia.com.au/warranty-statement/*

WARNING

- Installation of fans **MUST** follow SAA standards and meet local authority regulations.
- Installation **MUST** be carried out by a qualified and licensed electrician.
- Fan and light **MUST** be earthed.
- Bracket **MUST** be firmly attached to a flat solid structure or timber frame.
- **DO NOT** mix blades from one model to another, all blades MUST be replaced if damaged.
- The warranty is **VOID** if product is not installed according to this installation guide.

E: sales@martecltd.com.au | P: 02 8778 7500
www.martecaustralia.com.au