INSTALLATION GUIDE
Quantum DC Ceiling Fan

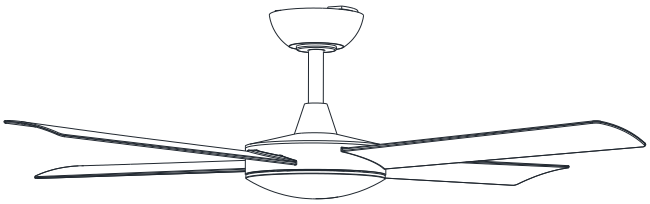

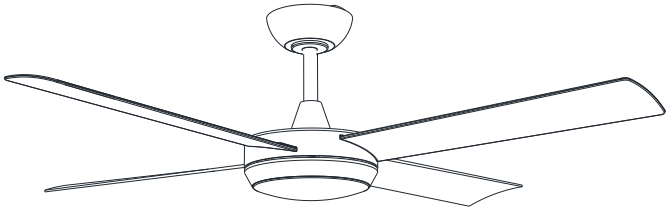

Models Parameters (Fan Only):-

MQDC124WR	1220mm 4 ABS Fast Fix Blade Remote Control Ceiling Fan White
MQDC134WR	1320mm 4 ABS Fast Fix Blade Remote Control Ceiling Fan White
MQDC134MR	1320mm 4 ABS Fast Fix Blade Remote Control Ceiling Fan Black

Models Parameters (Fan and LED Light):-

MQDC1243WR	1220mm 4 ABS Fast Fix Blade Remote Control Ceiling Fan with Variable Dim 24W CCT LED Light Matt White
MQDC1343WR	1320mm 4 ABS Fast Fix Blade Remote Control Ceiling Fan with Variable Dim 24W CCT LED Light Matt White
MQDC1343MR	1320mm 4 ABS Fast Fix Blade Remote Control Ceiling Fan with Variable Dim 24W CCT LED Light Matt Black

Application

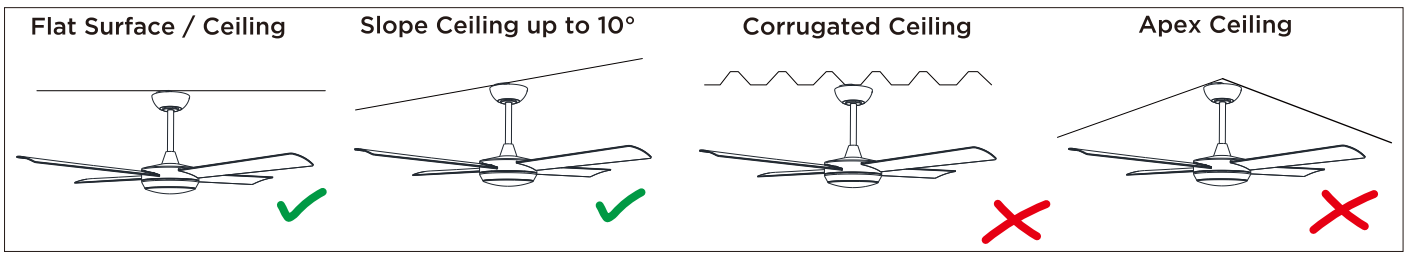

CAUTION
READ INSTRUCTIONS CAREFULLY FOR SAFE INSTALLATION AND FAN OPERATION

MUST BE INSTALLED BY A LICENSED ELECTRICIAN

SAFETY PRECAUTIONS

WARNING:

To ensure safe operation, this fan requires a complete electrical isolation switch (all-pole disconnection type) installed in the fixed wiring, as mandated by AS/NZS 60335-1, clause 7.12.2.

The warranty becomes void if the product was installed without an all-pole disconnection as per the instruction manual by a qualified and licensed electrician.

Example: When a ceiling fan's electrical circuit is equipped with an all-pole safety switch at the switchboard for isolation, it achieves all-pole disconnection as specified in AS/NZS 60335.1, clause 7.12.2.

IMPORTANT: An isolation switch must be included as part of the installation by the electrician.

1. Limited Use: This appliance is not designed for use by individuals (including children) with reduced physical, sensory, or mental abilities, or those lacking experience or knowledge, unless supervised or instructed by a responsible person.
2. Child Supervision: Children must be supervised to prevent them from playing with the appliance.
3. Weight Capacity: The mounting structure must support at least 20kg.
4. Ceiling Support: Secure mounting requires solid bracing (timber noggins or joists) in the ceiling. If unavailable, install a timber support secured to the joists. Metal grid ceilings are unsuitable.
5. Bracing Support: The bracing must be firmly secured to the back of any non-structural ceiling panel (e.g., gyprock, plaster) for safety and quiet operation.
6. Blade Clearance: For safe and effective operation, maintain a minimum fan blade clearance of 2.1m from the floor.
7. Professional Installation: Installation must be performed by a licensed electrician.
8. WARNING: If unusual wobbling or oscillation occurs, immediately stop using the fan and contact the manufacturer.
9. WARNING: Light and fan must be on the same phase. Before servicing, ensure both light and fan circuits are disconnected.
10. WARNING: It is essential that the installing electrician has applied an appropriate amount of force to ensure the blades are clicked in securely, BEFORE installing and tightening the safety screw, and before turning the fan on. Martec will NOT be responsible for any consequential damage due to the blades not being engaged correctly.

BEFORE INSTALLATION

UNPACK THE CEILING FAN CAREFULLY AND IDENTIFY ALL PARTS.

FAN ONLY MODEL

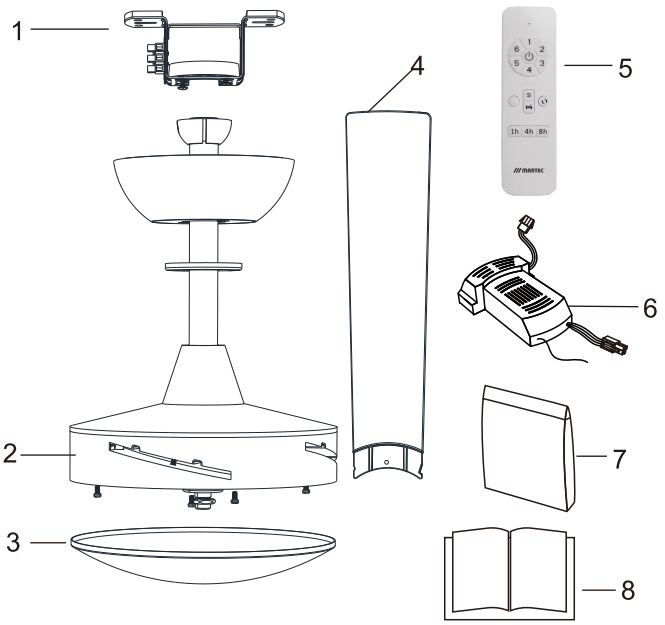

Part List:-
1. 1x hanging bracket
2. 1x motor assembly
3. 1x no light plate
4. 4x blades
5. 1x remote transmitter
6. 1x remote receiver
7. 1x screw and balancing kit
8. 1x instruction manual

FAN + LED LIGHT MODEL

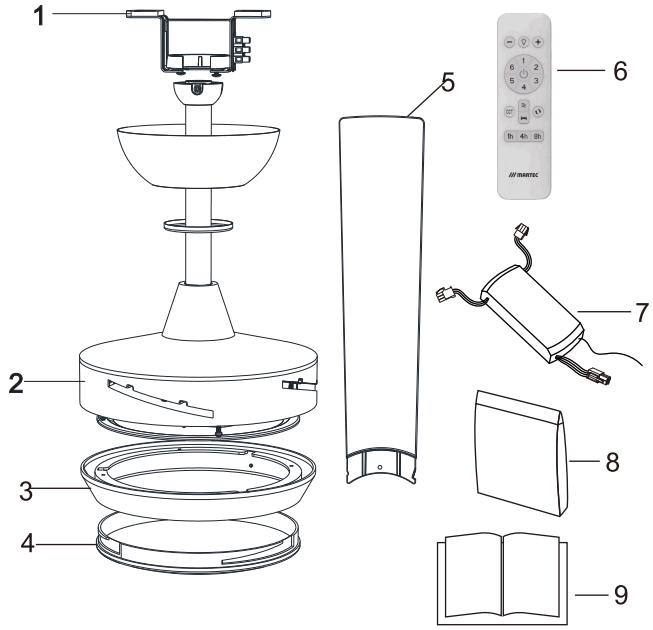

Part List:-
1. 1x hanging bracket
2. 1x motor assembly
3. 1x lamp Plate
4. 1x lampshade
5. 4x blades
6. 1x remote transmitter
7. 1x remote receiver
8. 1x screw and balancing kit
9. 1x instruction manual

PLEASE NOTE: Check for any damage to the fan prior to installation.
Physical damage such as marks and scratches are not covered by the in-home warranty.
In this case, please contact the Martec support team to discuss replacement parts.

BEFORE INSTALLATION

MOUNTING BRACKET

- The ceiling fan must be installed in a location where the blades have a minimum 300mm spacing from the tip of the blade to the nearest objects or walls.
- Secure the mounting bracket to a ceiling joist/structure that can carry a load of at least 20kg with included screws, ensuring 30mm minimum screw penetration.

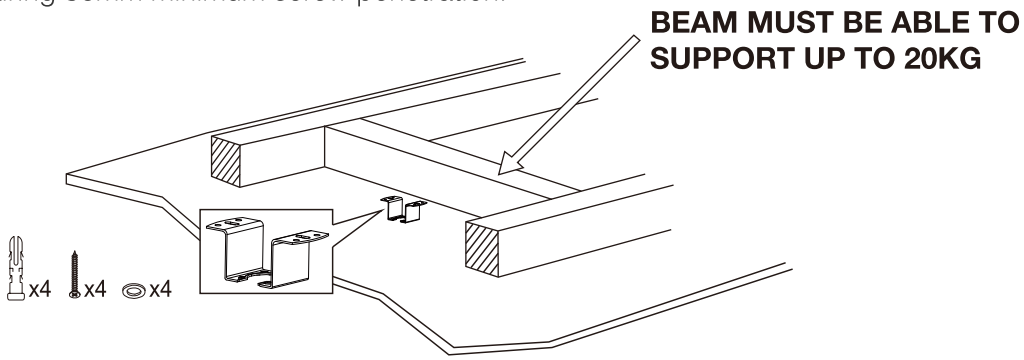

NOTE:THIS PICTURE IS FOR ILLUSTRATIVE PURPOSES ONLY AND DOES NOT REPRESENT THE ACTUAL BRACKET.

BLADE INSTALLATION

Line up the blade with the blade slot on the centre hub of the ceiling fan. Ensure that the side that says this side up is facing the ceiling, gently insert the blade all the way until it clicks into place. Check the blade is properly engaged by applying appropriate amount of force to check there is no issue with locking system. After checking the blade is engaged, Take the blade screws out of the hardware pack, then tighten them upward to secure the fan blades.

To remove the blade, first remove the blade screw, then push the patented release lever next to the corresponding blade slot within the ceiling fan hub. This is found by simply unscrewing the bottom plate (on no light models) or removing the light (on with light models).

NB: Ensure the blades do not get damaged or bent during the installation process while the fan is on the ground. This will affect the performance and balance of the fan, and this is not covered under warranty

WARNING: It is essential that the installing electrician has applied an appropriate amount of force to ensure the blades are clicked in securely, BEFORE installing and tightening the safety screw, and before turning the fan on. Martec will NOT be responsible for any consequential damage due to the blades not being engaged correctly.

FAN ONLY MODEL

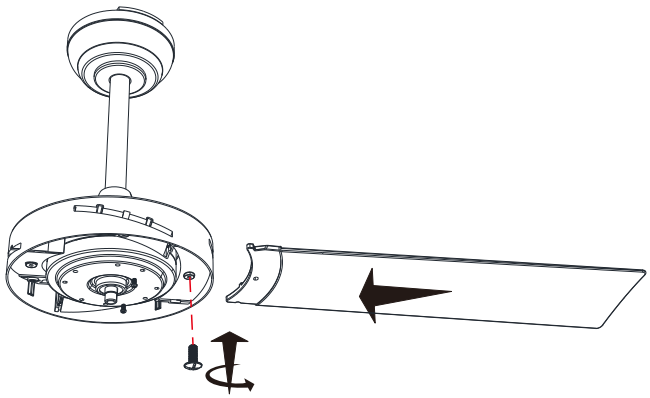

FAN + LED LIGHT MODEL

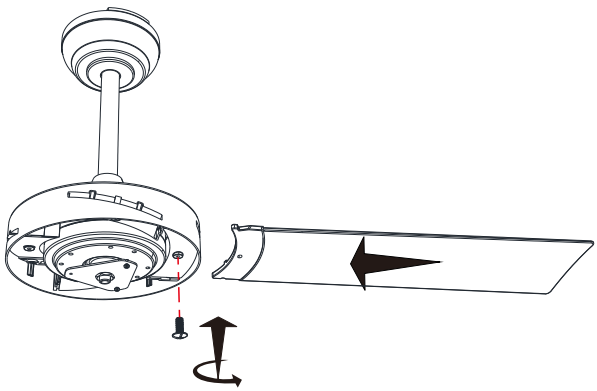

BEFORE INSTALLATION

FAN ONLY MODEL, the ceiling fan assembly complete.

Install the cover as illustrated to finish the installation. If you are installing model with LED light, GO TO the next step.

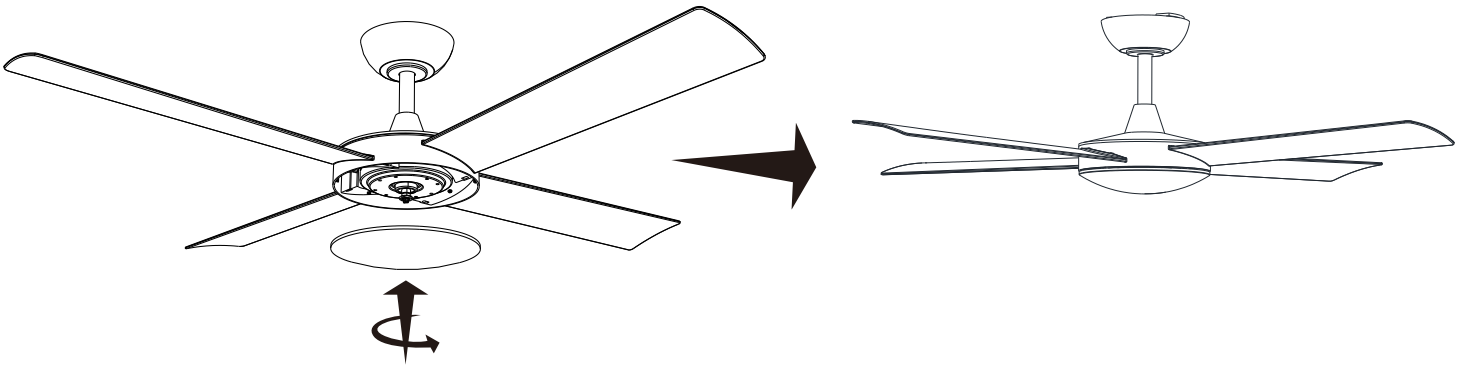

FAN + LED LIGHT MODEL

If the fan has a light, **after** the blades have been fitted, attach the light kit supplied in the box to the bottom of the fan and affix using the 3 screws supplied. Carefully plug in the plug coming from the centre of the fan into the corresponding plug on the light kit. The diffuser supplied is a simple clockwise or counter clockwise turn to install or remove it from the light base.

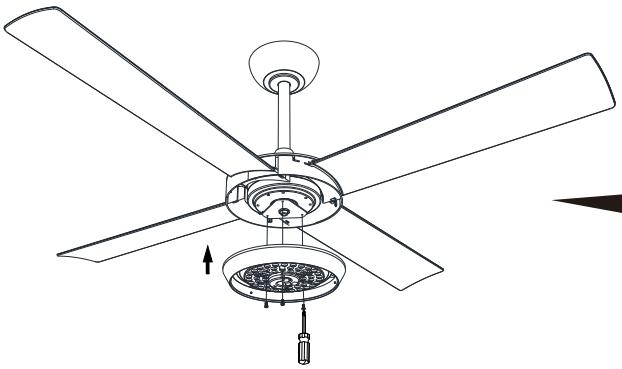

Loose screws

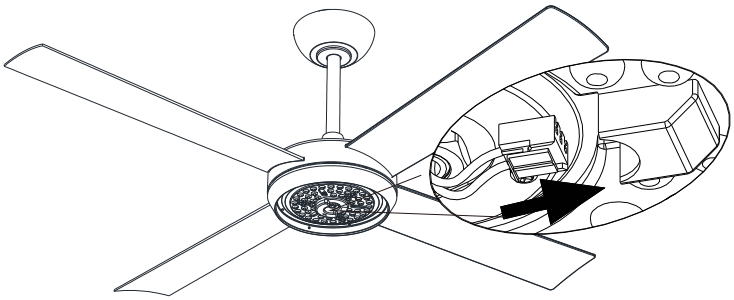

Plug the plug from light kit into the plug from the fan.

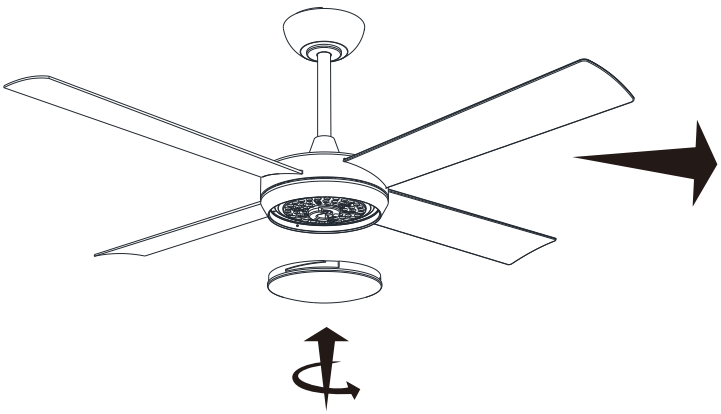

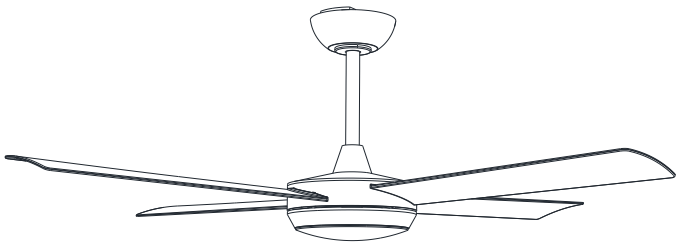

MOUNTING BRACKET INSTALLATION

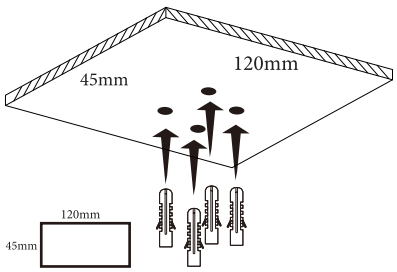

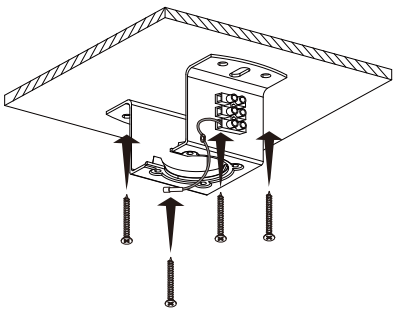

The minimum board size for installing

Align the bracket and screw the hanger bracket to the ceiling tightly.

HANGING THE FAN

Carefully lift the assembled fan onto the mounting bracket, ensuring the hanger ball slot (A) is completely seated and engaged with the mounting bracket tab (B). This proper engagement (C) prevents fan rotation during operation.

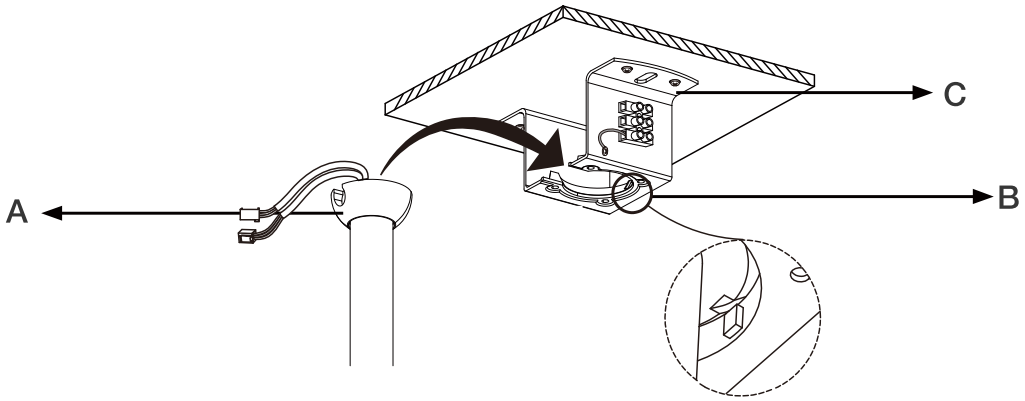

ANGLED CEILING INSTALLATION

This fan hanging system supports a maximum slope of 10 degree ceiling. If there is a greater slope, then an angle ceiling canopy accessory kit is required.

IMPORTANT: To maintain safety and functionality on raked ceilings, the hanging bracket tab (B), which engages with the hanging ball groove (A), must be installed at the highest point of the ceiling.

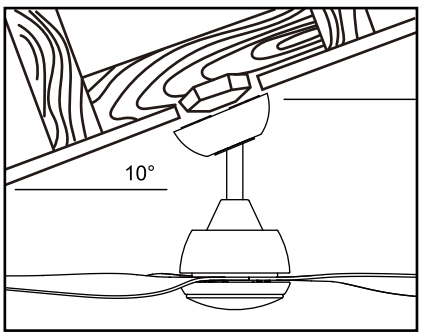

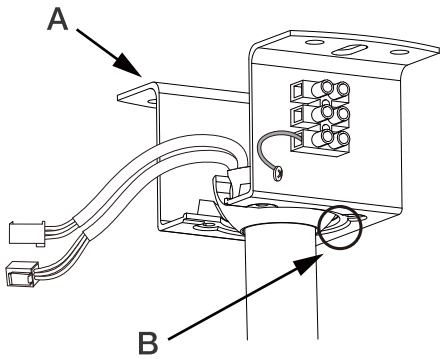

INSTALL RECEIVER REMOTE CONTROL

Wire up the receiver with quick connectors and insert into the mounting bracket. Make sure the antenna wire is safely folded inside the canopy cover before final assembly. (Do not cut the antenna wire). Make sure the power is off at the mains before commencement of installation.

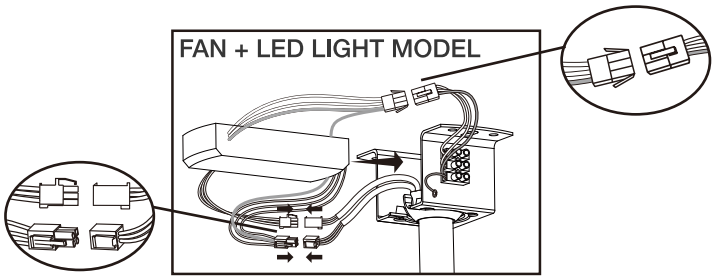

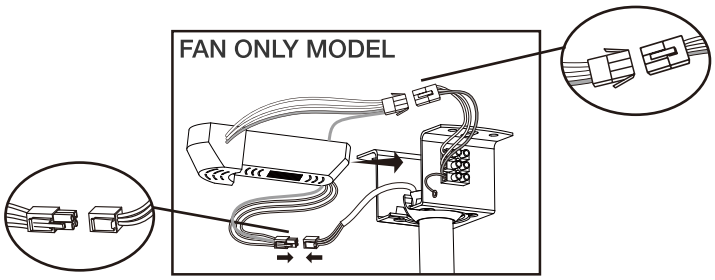

IMPORTANT REMINDERS

- Receiver must be correctly installed within the mounting bracket.
- When the transmitter cannot control the receiver, please check:
  i) has sufficient battery in the transmitter, even if the indicator light on transmitter lights up there may not be enough voltage to transmit a command.
  ii) any existence of similar remote controlled products nearby that cause interference.
- Replace battery if getting low as this will affect transmitter sending commands.
- Take the battery out from the transmitter when leaving unused for a long time to avoid battery leaks.
- Isolation switch much be connected in the line.

FINISHING THE INSTALLATION

Fix the Earth cable and complete all electrical connections at the mounting bracket.
NOTE: This fan is a Class I electrical product

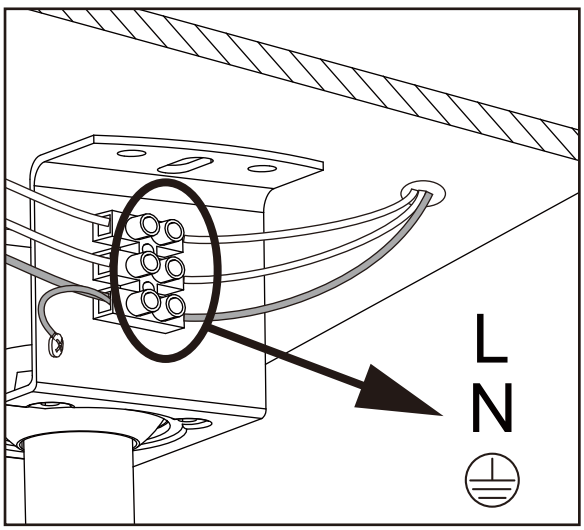

FINISHING THE INSTALLATION

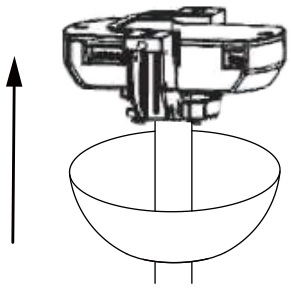

Slide the canopy upward onto the mounting bracket and rotate it counter-clockwise to lock it in place. Verify that both mounting bracket tabs are fully engaged within the canopy slots. The canopy should have an approximate 3mm gap from the ceiling.

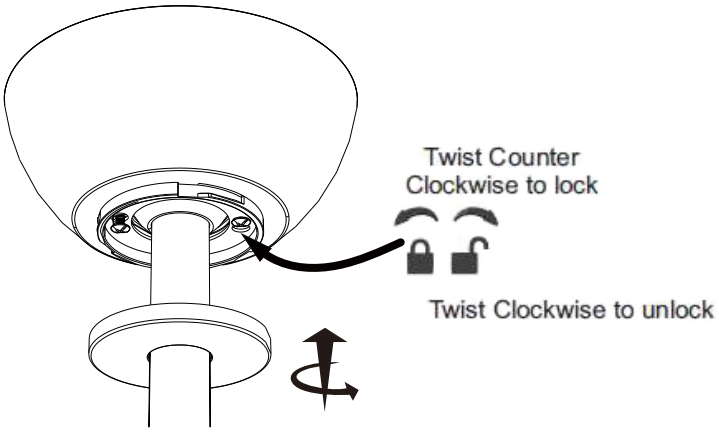

Ensure all wires are tucked neatly into the canopy to avoid any damage.

PLEASE NOTE: Ensure the Canopy has fixed fully into position by twisting firmly.

ELECTRICAL WIRING DIAGRAM

WARNING: It is the purchaser's responsibility to ensure that the installation of Martec product has been carried out by a certified electrician as per the guidelines of this instruction manual.

- Connect “LIVE” supply to the “L” of the terminal block on the mounting bracket.
- Connect “EARTH” supply wire to the ⏚ of the terminal block on the mounting bracket.
- Connect “NEUTRAL” supply to “N” of the terminal block on the mounting bracket.
- Screw “EARTH” cable from motor to cavity to ⏚ on the mounting bracket.

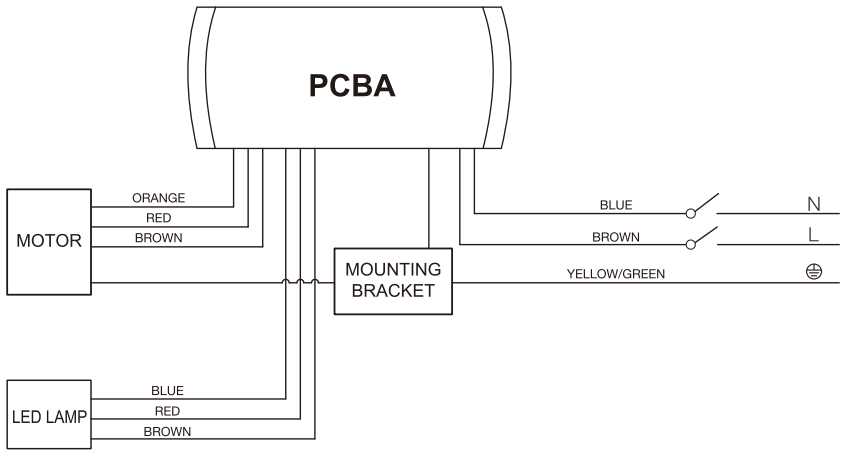

Please note: This is only applicable to models with a LED light.

REMOTE CONTROL

PLEASE NOTE: The remote handset cannot be used either simultaneously or in conjunction with a wall controller. Unless otherwise advised by Martec.

FAN ONLY MODEL	
⏻	Fan off only.
🛏	Sleep Mode: turns on the fan at an extra lower speed to create a gentle breeze.
Fan Speeds	Speed button 1= lowest fan speed, 6= highest fan speed.
≋	Wind Mode: 1-6 fan speed changes randomly to feel the breeze (designed for the elderly and children)
↻	Summer/Winter Reverse Mode: forward (spins clock wise with highest part of the blade trailing) and reverse (spins counter clock wise with highest part of the blade leading).
1h/4h/8h	Preset timer for fan to stop automatically. E.g. if timer set at 1h and then 4h, fan will stop at 4h. Setting default to last press. To engage time this has to be last button pressed after selecting speed, pushing any other button after selecting timer will cancel it.

FAN + LED LIGHT ONLY MODEL	
⏻	Fan off only.
🛏	Sleep Mode: turns on the fan at an extra lower speed to create a gentle breeze.
Fan Speeds	Speed button 1=lowest fan speed, 6= highest fan speed.
≋	Wind Mode: 1-6 fan speed changes randomly to feel the breeze (designed for the elderly and children)
↻	Summer/Winter Reverse Mode: forward (spins clock wise with highest part of the blade trailing) and reverse (spins counter clock wise with highest part of the blade leading).
1h/4h/8h	Preset timer for fan and light to stop automatically. E.g. if timer set at 1h and then 4h, fan will stop at 4h. Setting default to last press. To engage time this has to be last button pressed after selecting speed, pushing any other button after selecting timer will cancel it.
💡	Light on/off.
CCT	Changeable colour temperature, 2700K (warm white) up to 6000K (cool white)
+/-	+ = increase light brightness, - = decrease light brightness

REMOTE CONTROL OPERATION

A remote control consists of two parts:
1. Handset / controller (transmitter).
2. Receiver (receives message from the handset and is located in the upper canopy of the fan)

IMPORTANT: If you have multiple fans in the house, you must pair them one at a time to their corresponding transmitter. Power must not be on to other fans while pairing or you will inadvertently pair multiple fan's to only one transmitter. If this occurs, you need to use the reset function and begin re-pairing with power only on to the fan being paired.

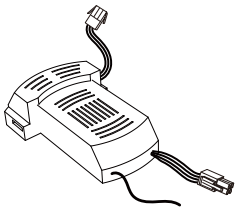

Pairing the remote control:

Step 1: Turn on the ceiling fan.

Step 2: Within the first 20 seconds, continue pressing the button with the symbol ⏻ until you hear a beep sound. It is paired. If you don't hear a beep sound, turn off the ceiling fan and start step 1 and step 2 again.

Step 3: Open Smart life app and click add device and fan should automatically appear press connect. Fan should now be controllable via the smart life app (see following page).

To unpair the remote control:

Push and hold "4h" "8h" "⏻" at the same time for 5 seconds. The remote is unpaired after a "beep" sound.

Silent mode control:

Step 1: Turn on the ceiling fan.

Step 2: Press and hold "⏻" and "" buttons simultaneously for 3 seconds to enter silent mode. Hold for another 3 seconds to deactivate it.

IMPORTANT FACTS

Fan Operation:
The DC ceiling fan has been designed for a very fast installation, maximise airflow with minimal energy usage and operate as quietly as possible. Unlike high-speed traditional fans, ceiling fans generate a gentle, high-volume airflow that promotes evaporative cooling. This method is highly effective for cooling people and consumes significantly less power than air conditioning.

Remote controlled fans must be installed with an isolation switch on the wall.

Warranty is void if parts are used that are not Martec products, including but not limited to remote controls, receivers, led lights, switches, wall control, dimmers, extension rods and angle canopies.

Pairing multiple fans to one remote - Pair fan 1 using the pairing instructions, using the same remote pair fan 2 in the same way with power on to all fans to be paired to the transmitter.

When using the timer, the timer button must be the last button pressed, if another button is pressed after the timer button, the timer is cancelled.

This remote has a memory function, this means if there is a power outage, the fan will restore the same function as when the power was cut. If the isolation is switched off and then turned back on, the fan will resume the function it was operating at, before being switched off.

Normal Wear and Tear:
Normal wear and tear, such as loose screws or increased noise due to moving parts, and damage from accidental contact are not covered under warranty. However, regular maintenance, including tightening screws and changing batteries seasonally, can significantly reduce these issues.

Night Noise:
It's important to know that while the DC ceiling fan is designed for quiet operation, all electric motors make some noise. If you hear a humming sound, it may be due to ripple control signals from your electricity provider, which is normal. Also, a short beep will sound when you use the remote, confirming the fan has received your instruction.

MAINTENANCE

CARE AND CLEANING:

IMPORTANT: For your safety, always disconnect the power at the main switch before any fan maintenance or cleaning.

- Never submerge the ceiling fan in water or any liquids. This can cause damage to the motor and blades, and create an electrical shock hazard.
- Avoid contact with organic solvents or cleaners on any part of the fan.
- Clean the fan blades with a damp, clean cloth only. Do not use organic solvents or cleaners.
- The motor's bearings are permanently lubricated; no oiling is required.

TROUBLE SHOOTING

SIMPLE TROUBLESHOOTING	
Symptoms	**Troubleshooting**
Fan not responding to remote	Is isolation switch turned on?
	Is there new batteries in the remote?
	Is the remote paired using the pairing instructions on the website?
Ticking sound	Tighten all nuts, bolts and screws.
	Check installation.
	Is the fan clean and free of debris, insects or any foreign matter?
Fan not moving air (cooling) as expected	To cool the room the fan should be spinning anti-clockwise

FAQs	
Question	**Answer**
Receiver beeping when I press the buttons on the remote.	This is a setting that cannot be switched off, it is to confirm that the command has been received by the fan
What happens if I have a power outage?	These fans have memory and will resume the settings prior the power outage, if pairing is lost in the outage, please follow remote pairing instructions

WARRANTY INFORMATION

2 Year In-Home Warranty
For further information please visit our website (link below) OR scan the QR code.
https://www.martec.com.au/warranty-statement/

For technical support, please contact Martec customer service hotline at **(02) 8778 7500**. This fan is suitable for both indoor and covered outdoor areas, as defined in our warranty statement.

To ensure the fan remains in optimal condition, it should be protected from the elements. Exposure to excessive wind, dust, water, or salt air may cause damage that will not be covered under the warranty.

If your fan includes a light, do not remove the light panel, as doing so may cause damage not covered by the warranty. For assistance, feel free to reach out to our customer service team.

If you suspect any issues with the installation, please contact your installer to resolve the matter. In case you believe the issue is related to a manufacturing defect, you can file a warranty claim by visiting **https://www.martec.com.au/warranty-claim-form** or scan below QR code.

IMPORTANT NOTICE: All claims for warranty must be accompanied with the following three documents:

1. Copy of the Installation Receipt OR Tax Invoice OR Certificate of Compliance for the installation of the Martec product from the installing electrician.
2. Copy of the Purchase Receipt for the Martec product, and accessories such as extension rod or remote control.
3. Submit an online warranty claim form. Please ensure that the purchaser's full name and contact details are clearly stated, in addition to the full nature of the fault and the serial or P.O. number which can be located on the top motor housing above the Ceiling Fan Blades.

It is the responsibility of the purchaser to keep the documents required for a warranty application for the duration of the warranty period.

Customer Service operates between 8AM to 4PM EST Monday to Friday.
Customer Service Number: (02) 8778 7500